Module 1 : Fundamentals of Power System Protection

Lecture 4 : Desirable Attributes of Protection

Objectives

In this lecture we will learn the following desirable attributes of protection system *viz*:

- Dependability.
- Security.
- Sensitivity.
- Selectivity.
- Reliability.
- Necessity of speed in relaying.
- Speed vs. accuracy conflict.

A protection system is characterized by following two important parameters:

- Dependability
- Security

4.1 Dependability

A relay is said to be dependable if it trips only when it is expected to trip. This happens either when the fault is in it's primary jurisdiction or when it is called upon to provide the back-up protection. However, false tripping of relays or tripping for faults that is either not within it's jurisdiction, or within it's purview, compromises system operation. Power system may get unnecessarily stressed or else there can be loss of service. Dependability is the degree of certainty that the relay will operate correctly:

$$\%\ Dependability = \frac{Number\ of\ correct\ trips}{Number\ of\ desired\ trips} \times 100$$

Dependability can be improved by increasing the sensitivity of the relaying system.

4.1.1 Sensitivity

For simplicity, consider the case of overcurrent protection. The protective system must have ability to detect the smallest possible fault current. The smaller the current that it can detect, the more sensitive it is. One way to improve sensitivity is to determine characteristic signature of a fault. It is unique to the fault type and it does not occur in the normal operation. For example, earth faults involve zero sequence current. This provide a very sensitive method to detect earth faults. Once, this signature is seen, abnormality is rightly classified and hence appropriate action is initialized.

4.2 Security

On the other hand, security is a property used to characterize false tripping on the relays. A relay is said to be secure if it does not trip when it is not expected to trip. It is the degree of certainty that the relay will not operate incorrectly:

$$\% \, Security = \frac{Number \, of \, correct \, trips}{Total \, number \, of \, trips} \times 100$$

False trips do not just create nuisance. They can even compromise system security. For example, tripping of a tie-line in a two area system can result in load-generation imbalance in each area which can be dangerous. Even when multiple paths for power flow are available, under peak load conditions, overloads or congestion in the system may result. Dependability and security are contrasting requirements. Typically, a relay engineer biases his setting towards dependability. This may cause some nuisance tripping, which can in the worst case, trigger partial or complete blackout! Security of the relaying system can be improved by improving selectivity of the relaying system.

4.2.1 Selectivity

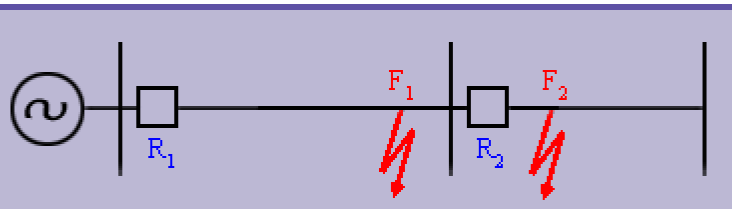

Relay R_1 cannot discriminate between F_1 and F_2 accurately as $I_{F1} \approx I_{F2}$
Time discrimination between R_1 and R_2 provides a solution.

Fig 4.1 Distance or Overcurrent Protection

Like sensitivity, selectivity also implies an ability to discriminate. A relay should not confuse some peculiarities of an apparatus with a fault. For example, transformer when energized can draw up to 20 times rated current (inrush current) which can confuse, both overcurrent and transformer differential protection. Typically, inrush currents are characterized by large second harmonic content.

This discriminant is used to inhibit relay operation during inrush, there by, improving selectivity in transformer protection. Also, a relay should be smart enough, not just to identify a fault but also be able to decide whether fault is in it's jurisdiction or not. For example, a relay for a feeder should be able to discriminate a fault on it's own feeder from faults on adjacent feeders. This implies that it should detect first existence of fault in it's vicinity in the system and then take a decision whether it is in it's jurisdiction. Recall that directional overcurrent relay was introduced to improve selectivity of overcurrent relay.

This jurisdiction of a relay is also called as **zone of protection .** Typically, protection zones are classified into primary and backup zones. In detecting a fault and isolating the faulty element, the protective system must be very selective. Ideally, the protective system should zero-in on the faulty element and only isolate it, thus causing a minimum disruption to the system. Selectivity is usually provided by (1) using time discrimination and (2) applying differential protection principle. With overcurrent and distance relays, such boundaries are not properly demarcated (see fig 4.1). This is a very important consideration in operation of power systems.

4.2 Security (contd..)

4.2.1Selectivity

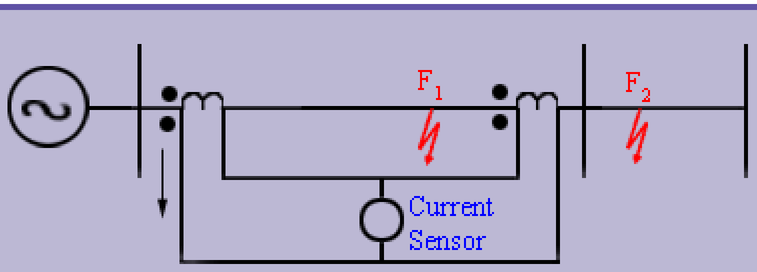

Fig 4.2 Differential Protection Scheme

However with a differential protection the CT location provides 'crisp' demarcation of zone of protection of CT (see fig 4.2). The fault F_1 is in the relay's zone of protection, but fault F_2 is not in its jurisdiction. Because differential protection scheme do not require time discrimination to improve selectivity, they are essentially fast. These aspects will be discussed in more detail in the later lectures.

4.3 Reliability

A relaying system has to be reliable. Reliability can be achieved by redundancy i.e. duplicating the relaying system. Obviously redundancy can be a costly proposition. Another way to improve reliability is to ask an existing relay say, protecting an apparatus A to backup protection of apparatus B. Both the approaches are used (simultaneously) in practice. However, it is important to realize that back-up protection must be provided for safe operation of relaying system. Redundancy in protection also depends upon the criticality of the power apparatus. For example, a 400 kV transmission line will have independent (duplicated) protection using same or a different philosophy; on the other hand, a distribution system will not have such local back-up. A quantitative measure for reliability is defined as follows:

$$\%\,Reliability = \frac{Number\ of\ correct\ trips}{Number\ of\ desired\ trips\ +\ Number\ of\ incorrect\ trips}\times 100$$

4.3 Reliability (contd..)

4.3.1 Example

The performance of an overcurrent relay was monitored over a period of one year. It was found that the relay operated 14 times, out of which 12 were correct trips. If the relay failed to issue trip decision on 3 occasions, compute dependability, security and reliability of the relay.

Number of correct trips = 12
Number of desired trips = 12 + 3 = 15

$$\%\ Dependability = \frac{Number\ of\ correct\ trips}{Number\ of\ desired\ trips}\times 100$$

$$= \frac{12}{15}\times 100 = 80\%$$

$$\%\,Security = \frac{Number\ of\ correct\ trips}{Total\ number\ of\ trips}\times 100$$

$$= \frac{12}{14}\times 100 = 85.71\%$$

$$\%\,Reliability = \frac{Number\ of\ correct\ trips}{Number\ of\ desired\ trips\ +\ Number\ of\ incorrect\ trips}\times 100$$

$$= \frac{12}{15+2} = 70.59\%$$

Note that even though dependability and security are individually above 80%, overall reliability much poor (only 70.55%).

4.3 Reliability

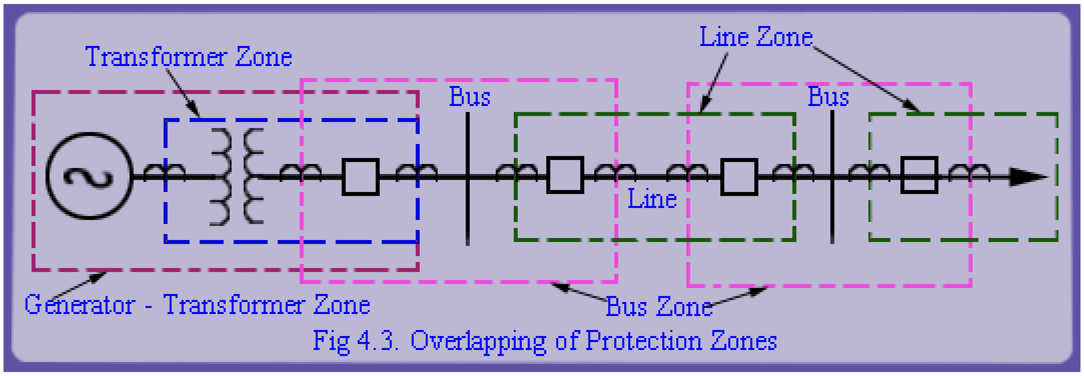

Fig 4.3. Overlapping of Protection Zones

Note that number of desired trips can be greater than or equal to number of correct trips. A desired trip may not happen for various reasons like, the fault level being below the relaying sensitivity, stuck circuit breaker, incorrect setting of relays poor maintenance of circuit breaker etc.

Zone of Protection

A relay's zone of protection is a region defined by relay's jurisdiction (see fig 4.3). It is shown by demarcating the boundary. This demarcation for differential protection is quite crisp and is defined by CT's location. On the other hand, such boundaries for overcurrent and distance relays are not very crisp. It is essential that primary zones of protection should always overlap to ascertain that no position of the system ever remains unprotected. It can be seen in fig 4.3. This overlap also accounts for faults in the circuit breakers. To provide this overlap additional CTs are required.

4.4 Necessity of Speed in Relaying

To maximize safety, and minimize equipment damage and system instability, a fault should be cleared as quickly as possible. This implies that relay should quickly arrive at a decision and circuit breaker operation should be fast enough. Typically, a fast circuit breaker would operate in about two cycles. A reasonable time estimate for ascertaining presence of fault is one cycle. This implies approximately three cycle fault clearing time for primary protection. On the other hand, if five cycle circuit breaker is used, fault clearing time increases to six cycles. So long as short circuit fault exist in a transmission system, the electrical output of generator remains below the mechanical input. If a bolted three phase fault occurs close to generator terminal (fig 4.4), $P_e = 0$. Thus, as per equation (1) with input P_m; the generator accelerates.

$$2H\frac{d^2\delta}{dt^2} = P_m - P_e \qquad \text{--- (1)}$$

4.4 Necessity of Speed in Relaying (contd..)

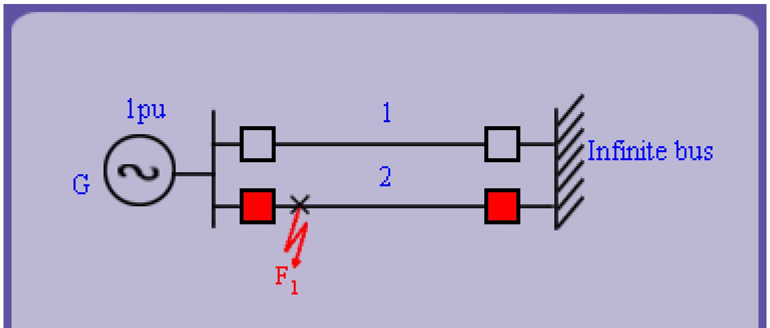

Fig 4.4 Single Machine Infinite Bus System

Fig 4.5 shows the pre and post fault characteristics for the single machine infinite bus system shown in fig 4.4. Initial operating point A is on the pre fault characteristic. Occurrence of fault reduces P_e to 0. The power generation imbalance accelerates generator and hence its δ (power angle) increases. At point C the fault is cleared by tripping the faulted line and the system moves to post fault characteristics. The power output jumps to point D. Now $P_e > P_m$ and the machine decelerates.

At point E, $\Delta\omega = \omega - \omega_0$ is equal to zero and the extreme point of swing is reached. As $P_e > P_m$, the deceleration continues and hence the rotor starts retarding. At point O, $P_e = P_m$ the acceleration is zero, but machine speed is lower than nominal speed ω_0 $(2\pi f_0)$. Consequently, the angle δ continues to fall back.

However, as δ reduces further, P_e also reduces, therefore $P_m - P_e > 0$ and the generator starts accelerating. This arrests the drop in δ at point F and the swing reverses, again a consequence of acceleration. In absence of damping, these oscillations will recur just like oscillation of a simple pendulum. However, because of damping provided by generator, the oscillations reduce in magnitude and finally system settles to equilibrium at point O. Click Here for Simulation

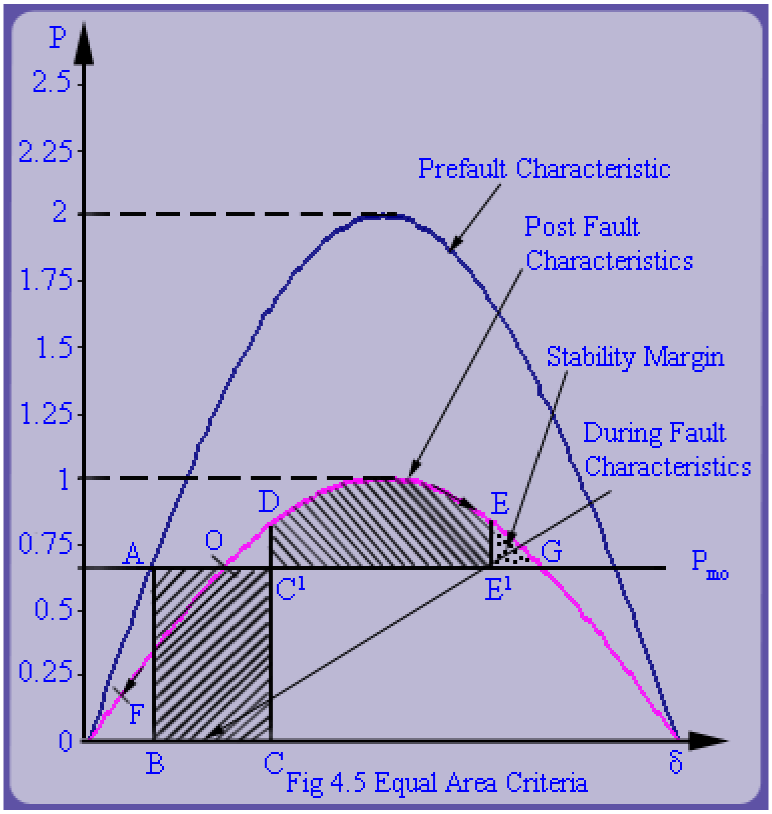

Fig 4.5 Equal Area Criteria

4.4 Necessity of Speed in Relaying (contd..)

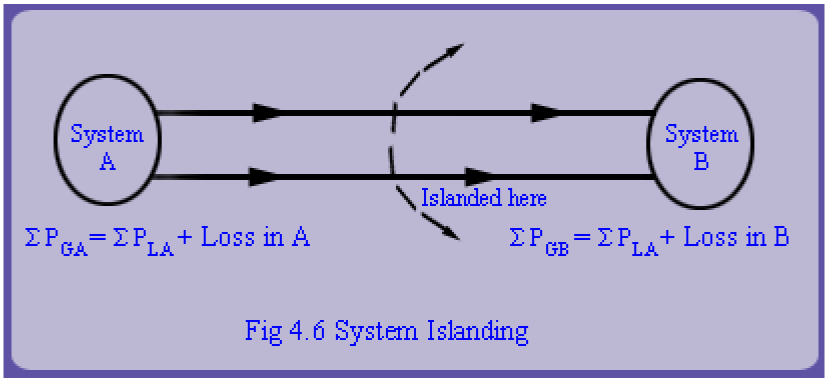

Fig 4.6 System Islanding

It should be obvious that interval BC is dependent on fault clearing time of the protection system. The shaded area $ABCC^1$ is the acceleration area and area C^1DEE^1 the deceleration area. As per equal area criteria, the post fault system reaches stable equilibrium if accelerating area equals to the decelerating area. The limit point for deceleration is defined by point G the intersection point of P_{m0} and the post fault characteristic.

If the swing of generator exceeds beyond point G, the generator moves from deceleration to acceleration region. Then, its angle δ continues to rise indefinitely, and the machine is said to go out-of-step. If any machine goes out-of-step with rest of system it has to be islanded. Out-of-step condition in a multi machine system can be simulated by transient stability program. Detection in real-time is a much more challenging task and it is dealt by 'out-of-step relaying' schemes. When a multi machine system is islanded in to different sub-systems, then for stable operation of each sub-system, it is necessary that each sub-system should have generation load balance. Fig 4.6, however it should be obvious by now that from the stability perspective, transmission system protection should be made as fast as possible. As the fault clearing time increases, the stability margin (area EE^1G) reduces. The fault clearing time at which the stability margin reduces to zero is called the critical clearing time.

4.4.1 Speed Vs. Accuracy Conflict

Intuition tells us that quickness is an invitation to disaster. The possible consequences of quick tripping decisions are:

- Nuisance Tripping
- Tripping for faults outside the relay jurisdiction.

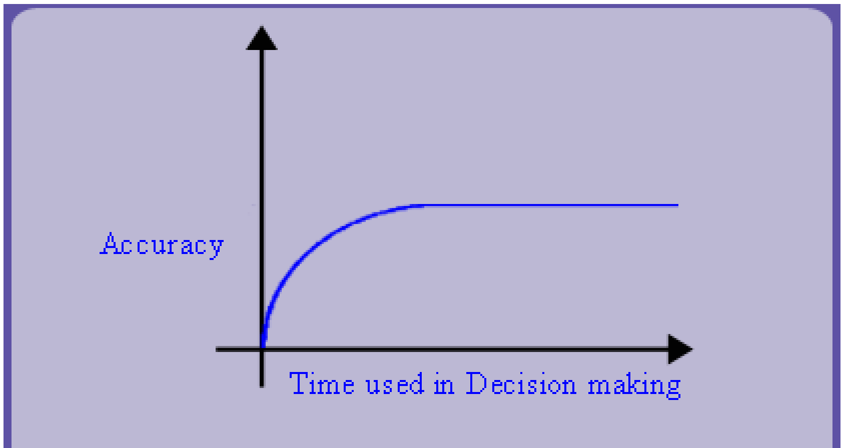

Fig 4.7 Conceptual illustration of Speed Vs. Accuracy Conflict

Nuisance tripping is the tripping when there is no fault, e.g. an overcurrent relay tripping on load. It compromises faith in the relaying system due to unnecessary loss of service. On the other hand, tripping on faults that are outside the relay's jurisdiction also cause an unwarranted loss of service in the healthy parts of the system.

It has to be mentioned that speed and accuracy bear an inverse relationship. The high-speed systems tend to be less accurate for the simple reason that a high speed system has lesser amount of information available at it's disposal for making decision. Thus, the protection engineer has to strike a balance between these two incompatible requirements. Innovations in protection are essentially driven by such requirements. The ways to tackle this conflict will become clear as we proceed into future lectures.

Review Questions

1. How is reliability achieved in a protective system?
2. Distinguish between dependability and security of a relay.
3. How is selectivity criteria provided in

   (a) Overcurrent protection scheme

   (b) Differential protection scheme.
4. Why is high speed system said to be less accurate?
5. The performance of a distance relay was monitored over a period of 2 years. It was found that it operated 15 times,
   12 were desired trips due to faults in its jurisdiction. It was found that relay failed to issue trip decision on 2 occasions.
   Compute dependability and security for the relay.
6. Define the following terms

   (a) % Dependability

   (b) % Security

   (c) % Reliability

Recap

In this lecture we have learnt the following desirable attributes of protection system *viz*:

- Dependability

- Security

- Sensitivity

- Selectivity

- Reliability

- Necessity of speed in relaying

- Speed vs. accuracy conflict

Congratulations, you have finished Lecture 4. To view the next lecture select it from the left hand side menu of the page