# Module 2 : Current and Voltage Transformers

## Lecture 7 : CT Saturation and DC Offset Current

### Objectives

In this lecture we will discuss:

- Origin of DC offset current.
- CT saturation due to DC offset current.
- Cautions for CT selection.

### 7.1 Origin of DC Off-set Current

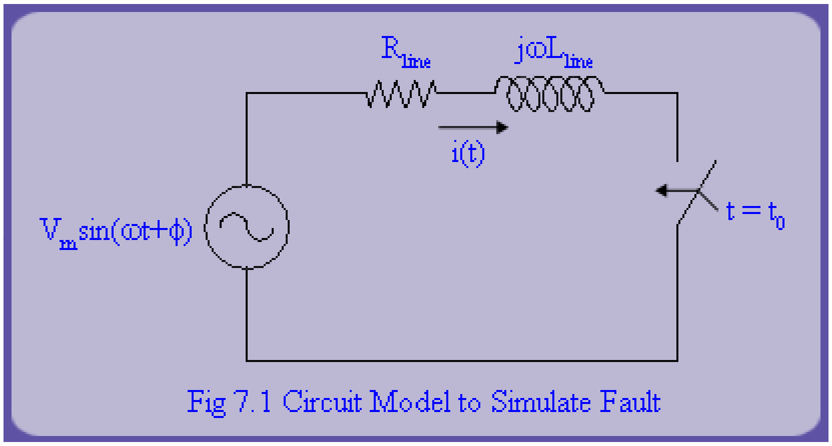

Fig 7.1 Circuit Model to Simulate Fault

Typically, fault current consists of symmetrical ac component and a dc offset current. To understand this issue, consider an unloaded transmission line excited by a voltage source. The fault strikes at time $t = t_0$. This can be simulated by closing the switch at $t = t_0$ in fig 7.1.

If $R_{line} + j\omega L_{line}$ or $|Z_{line}|\angle\theta$ models the line impedance, then the fault current in the line is given by the following expressions.

$$i(t) = 0 \qquad 0 \le t \le t_0$$

$$i(t) = \frac{V_m \sin(\omega t + \phi - \theta)}{|Z_{line}|} + I_0 e^{-\left(\frac{t-t_0}{\tau}\right)} \qquad t \ge t_0$$

where $\tau$ is the time constant of the line $\tau$ = $L_{line}/R_{line}$. Fig 7.2 shows a typical wave form of fault current containing DC offset current. The fault current can be decomposed into two components. The first component models the steady state sinusoidal ac response while the second component is the dc offset current due to the presence of inductance in the circuit. Recall that current in an inductance can not change instantaneously. DC offset current is a consequence of maintaining initial condition $i(t_0^-) = i(t_0^+)$. While the dc offset current in theory, would persist till infinity, it's trace in the actual wave form would not be seen beyond a few time constants. Table - 1 illustrates the values of $e^{\frac{-t}{\tau}}$ up to 10 time constants.

## 7.1 Origin of DC Off-set Current

Table 1

| Time | t = 0 | t = $\tau$ | t = 2$\tau$ | t = 4$\tau$ | t = 6$\tau$ | t = 8$\tau$ | t = 10$\tau$ |
|---|---|---|---|---|---|---|---|
| $e^{\frac{-t}{\tau}}$ | 1 | 0.3678 | 0.1353 | 0.0183 | 0.0024 | 0.0003 | 0.00004 |

It is more or less obvious that, dc offset is not seen in the waveform after 5 time constants. The peak value of dc offset current $I_0$ can be worked out by setting the current $i(t_0)$ to zero.

This implies that $I_0 = \frac{-V_m}{|Z_{line}|}\sin(\omega t_0 + \phi - \theta)$

Thus $i(t) = \frac{V_m}{|Z_{line}|}\sin(\omega t + \phi - \theta) - \frac{V_m}{|Z_{line}|}\sin(\omega t_0 + \phi - \theta)e^{-\left(\frac{t-t_0}{\tau}\right)}$

(1)

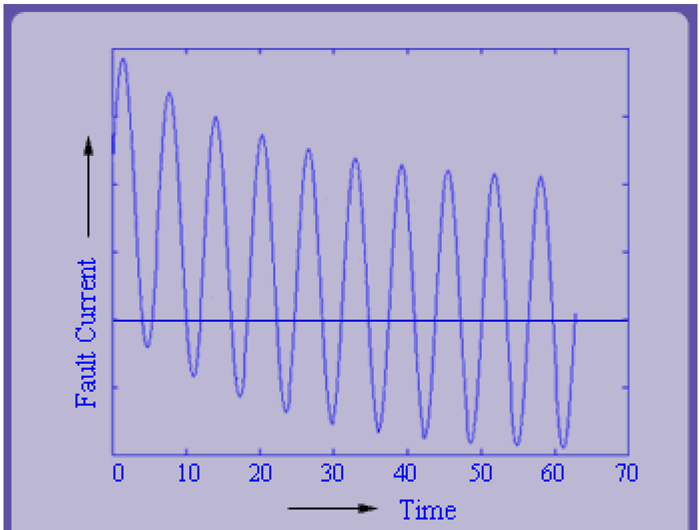

Fig 7.2 Typical Wave Form of Fault Current

Clearly, the peak value of dc offset current depends upon the following parameters:

- Time at which fault strikes,
- Phase angle $\phi$ of ac voltage and
- $|Z_{line}|$ and $\theta$ of transmission line.
- Voltage $V_m$

## 7.1 Origin of DC Off-set Current

It can be seen that severity of dc offset component in fault current is maximum when from equation (1)

a) $\phi = \theta$

and

b) $\omega t_0 = \pm\frac{\pi}{2}$

For example, if angle of transmission line is $80°$ , then with $\phi = 80°$ and $t_0 = \frac{\pi}{2 \times 2\pi \times 50} = \frac{1}{200}$ sec = 5msec, the severity of dc offset current would equal $I_0 = \frac{V_m}{|Z_{line}|}$ , which is also the peak value of symmetrical ac component of the current. This leads us to an important conclusion. *viz.,*

- Peak value of dc offset current can be as high as the symmetrical ac peak.

- Polarity wise the dc offset current can be positive or negative.

- Dc offset current may be totally absent eg. If $\phi = \theta$ , $t_0 = 0$.

- While, in above analysis, we have considered a single phase current, a 3 phase fault on a 3 phase transmission line

  would always induce dc offset current in at least two phases. DC offset has adverse impact on the CT performance.
  In the remaining lecture, we analyze effect of the dc offset current on CT performance.

## 7.2 CT Saturation due to DC - Offset Current

We now plan to show that CT can saturate on dc offset current. Also, we plan to show that the resulting distortions in the CT secondary current can be unacceptably high. While doing this analysis, we will neglect ac symmetrical component.
Note that when a CT core is saturated, it cannot replicate the ac component as the strong mutual coupling between primary and secondary is lost.

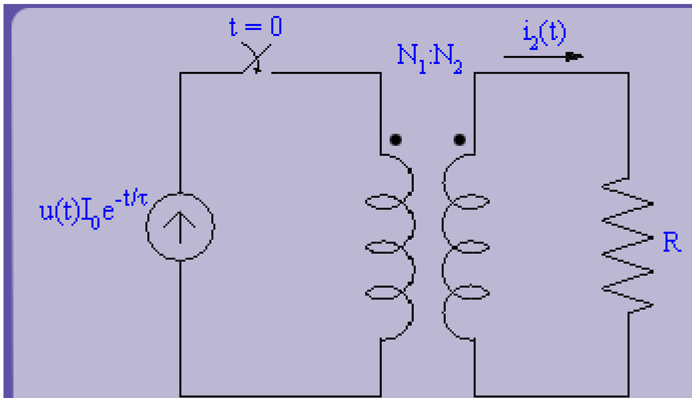

Fig 7.3 Ideal CT excited by DC Offset Current, u(t) is the Unit Step Function

First consider an ideal CT excited by the dc offset current source. An ideal CT will faithfully replicate the primary current waveform on the secondary side. Hence, the secondary current would be given by

$$i_2 = \frac{N_1 I_0}{N_2} e^{\frac{-t}{\tau}}$$

and the voltage developed across CT secondary would be given by

$$v_2^{dc}(t) = \frac{N_1 R I_0}{N_2} e^{\frac{-t}{\tau}}$$

Typical voltage waveform is shown in fig 7.4.

## 7.2 CT Saturation due to DC - Offset current

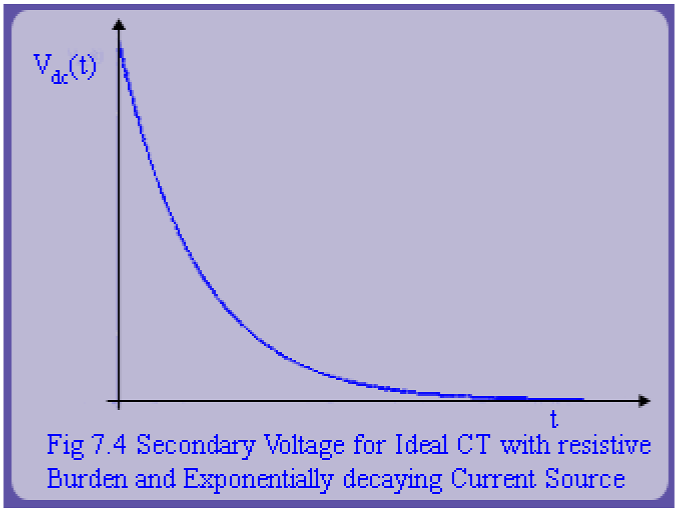

Fig 7.4 Secondary Voltage for Ideal CT with resistive Burden and Exponentially decaying Current Source

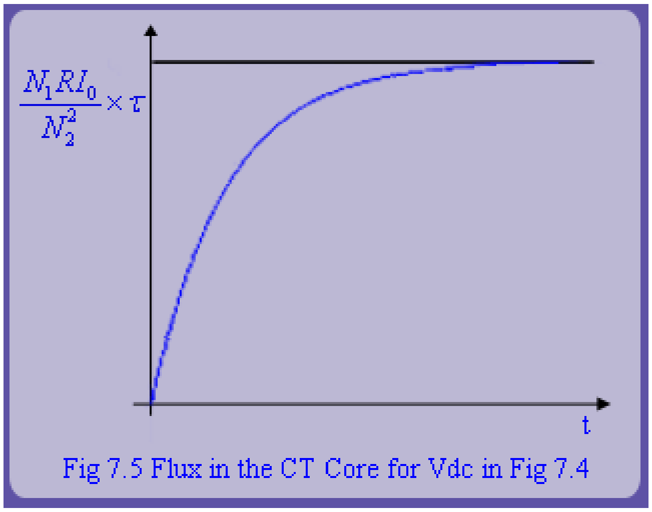

Fig 7.5 Flux in the CT Core for Vdc in Fig 7.4

For simplicity, let us assume that the initial flux in the transformer core at t = 0 is $\phi(0) = 0$.
Then, we can compute the flux in the transformer core by using Faraday's law,

$$v_2 = N_2 \frac{d\phi}{dt} \qquad \text{--- (2)}$$

$\Rightarrow$

$$\phi(t)-\phi(0)=\frac{1}{N_2}\int_0^t v_2\,dt=\frac{N_1RI_0}{N_2^2}\tau(1-e^{\frac{-t}{\tau}})$$

$$\Rightarrow\quad \phi(t)=\phi(0)+\frac{N_1RI_0}{N_2^2}\tau(1-e^{\frac{-t}{\tau}})$$

(3)

Fig 7.5 shows the plot of the flux due to dc offset current as a function of time with $\phi(0)=0$. It can be seen that flux in the core increases exponentially to a peak value of $\phi_{dc}^{max}=\frac{N_1RI_0}{N_2^2}\tau$ as $t\rightarrow\infty$, Since, maximum value of $I_0$ is $\frac{V_m}{|Z_{line}|}$, it implies that $\phi_{dc}^{max}$ can be as high as $\frac{N_1R}{N_2^2}\frac{V_m}{|Z_{line}|}\tau$.

## 7.2 CT Saturation due to DC - Offset current

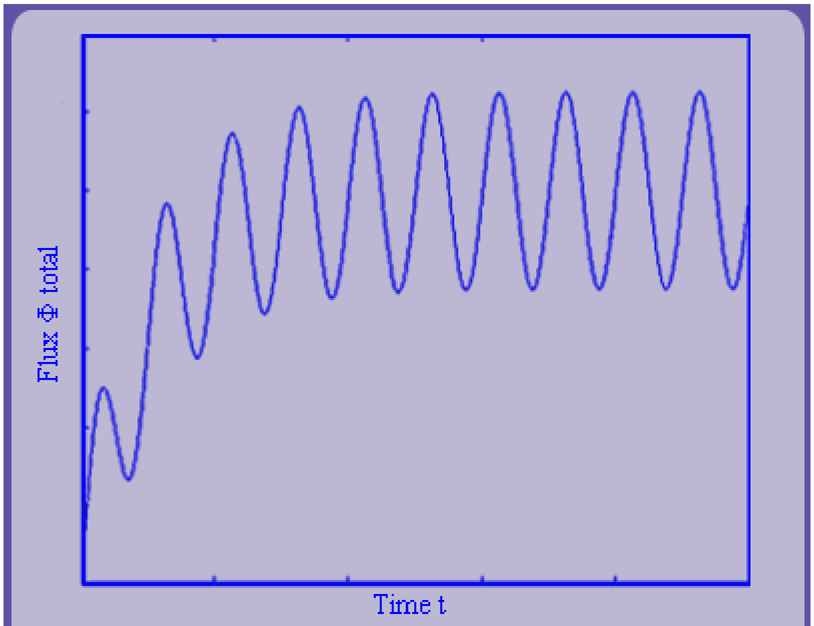

Fig 7.6

Note that unlike ac voltage induced flux, which is sinusoidal in nature, this flux (2) is unidirectional. AC voltage induced flux has zero average value. However, dc offset induced flux does not have this nice feature. The total instantaneous flux in ideal CT core is a summation of ac flux and dc flux (see fig 7.6)

The voltage developed across the CT secondary by the steady state i.e., sinusoidal component of the fault current is given by,

$$v_2^{ac}(t)=R\frac{V_m}{|Z_{line}|}\frac{N_1}{N_2}\sin(\omega t+\phi-\theta).$$

The sinusoidal ac flux in the CT core can be obtained by substituting operator $\frac{d}{dt}$ by $j\omega$ in equation (2).

Hence,

$$\bar{\phi}_{ac}=\frac{\bar{V}_2}{j\omega N_2}\quad\text{or}\quad \phi_{ac}(t)=\frac{RV_m}{\omega|Z_{line}|}\frac{N_1}{N_2^2}\sin(\omega t+\phi-\theta-\frac{\pi}{2})$$

Thus, the peak value of ac flux is given by the following relationship.

$$\phi_{ac}^{max}=\frac{RV_m}{\omega|Z_{line}|}\frac{N_1}{N_2^2}$$

Hence, the peak value of instantaneous flux in the core is given by,

$$\phi_{ac}^{max}+\phi_{dc}^{max}=\frac{RV_m}{\omega|Z_{line}|}\frac{N_1}{N_2^2}+\frac{N_1}{N_2^2}\frac{RV_m\tau}{|Z_{line}|}$$

In practice, if this flux exceeds the knee-point flux in the core (see fig 7.7), then the CT core will saturate.

## 7.2 CT Saturation due to DC - Offset current

As a consequence of CT core saturation, the secondary current would not faithfully replicate the primary current. In fact, in practice it is observed that CT secondary current is clipped as shown in fig 7.8. The clipping of CT current leads to “blinding” of the relay which cannot function any further. Hence, CT saturation in presence of dc offset current is a serious problem which relay designers have to face.

Note that dc flux accumulates gradually. In fact it depends upon the transmission line time constant ($\tau$). It is apparent that saturation should not occur immediately after the inception of the fault. Thus, if the relay is fast enough in decision making, it is likely that a relaying decision would be undertaken before the CT fully saturates. This is another important reason for demanding speed from the relaying system.

For bus-fault protection, where the CT saturation due to dc offset current can be a significant contributing factor, quarter cycle operations specification are imposed. Similarly, a distance relay is expected to operate within $\frac{1}{2}-1$ cycle time.

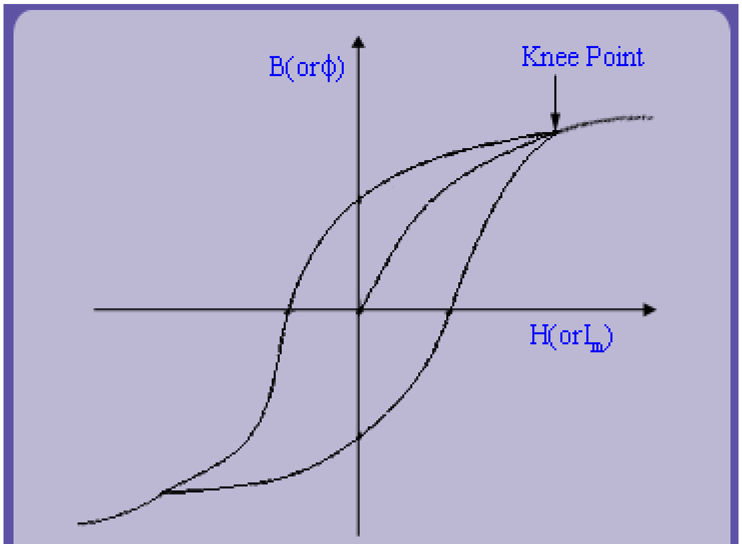

Fig 7.7 B - H Curve of Iron

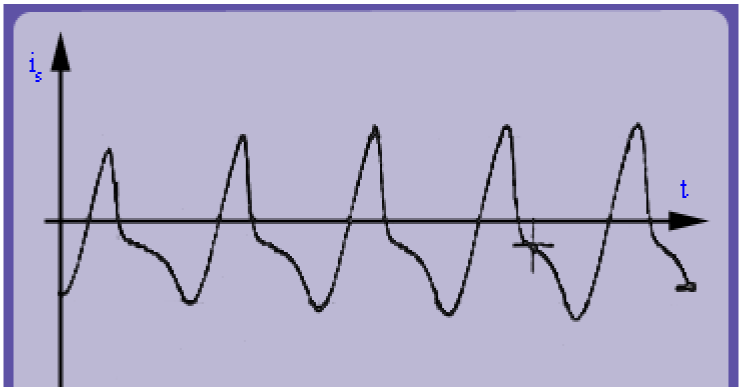

Fig 7.8 Experimentally Recorded CT Secondary Current under Saturation at IIT Bombay

## 7.3 CT Oversizing Factor

Typically, an efficient design of transformer would correspond to choosing the core cross section such that $\phi_m^{ac}$ should be near the knee point of B - H curve. One obvious way of avoiding CT saturation on dc flux is to oversize the core so that for flux $(\phi_{ac}^{\max}+\phi_{dc}^{\max})$, corresponding B is below the knee-point. Hence, the factor $\frac{(\phi_{ac}^{\max}+\phi_{dc}^{\max})}{\phi_{ac}^{\max}}$ is called core-oversizing factor.

Core-oversizing factor = $1+\frac{\phi_{dc}^{\max}}{\phi_{ac}^{\max}}$

$$=1+\frac{\frac{V_m}{|Z_{line}|}\frac{N_1}{N_2^2}R\tau}{\frac{V_m}{|Z_{line}|}\frac{N_1}{N_2^2}\frac{R}{\omega}}=1+\omega\tau$$

$$=1+\frac{\omega L_{line}}{R_{line}}$$

$$=1+\frac{X_{line}}{R_{line}}$$

$$= 1+\frac{X}{R}$$

Note that X/R in above equation is the transmission line X/R ratio. For a 220KV line with X/R ≈10, this would imply that transformer core should be oversized by a factor of 11. For a EHV line, with X/R ≈20, this would imply an oversizing requirement of about 21 times the usual design. Clearly, this high amount of oversizing is not practical. Thus, an important conclusion is that, protection engineers have to live with the saturation problem. Under the situation one should try to quickly reach the decision, before CT saturates. However, this brings in the picture, the well discussed 'speed vs accuracy conflict'. We will have more to say on the accuracy aspect of relaying in later lectures.

## 7.4 Cautions in CT Selection

While choosing a CT for a particular application, it is necessary to observe following precautions.

- The CT rating and continuous load current should match. For example, if maximum load current is 90A, a 100:5 CT may be acceptable but 50:5 is not acceptable.
- The maximum fault current should be less than 20 times the CT rated current. For example, 100:5 CT can be used, so long as burden on the CT is within the rated values and maximum primary fault current is below 2000A.
- The voltage rating of CT should be compatible. For example, 100:5 C100 would give linear response, upto 20 times rated current provided CT burden is kept below(100/20 x 5 = 1 Ω). With 2 Ω burden, this CT can be used only if maximum current is limited to 1000A.
- Paralleling of CT's e.g. in differential protection, or with SLG fault can create significant errors in CT performance. One should generally ascertain that magnetizing current is kept much below the pick up value.

### 7.4.1 *Exercise Problems*

1. If the current ratio is adequate for a protection, but CT burden is high; then the performance of CT may deteriorate due to large magnetizing current and/or saturation problem (see fig 7.9). The CT performance can be improved by connecting the CT's in series (see fig 7.10).

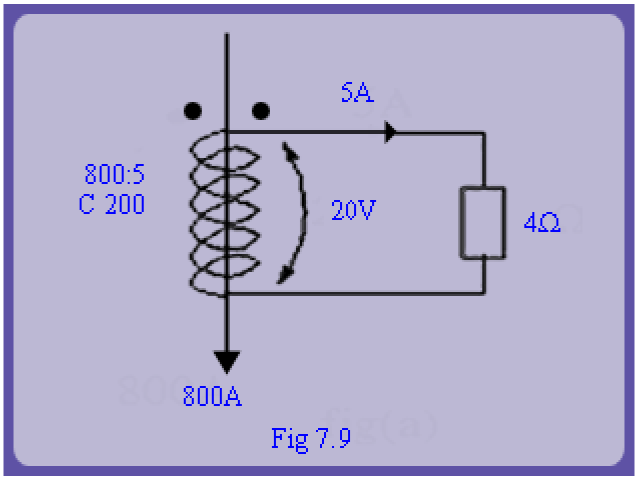

Fig 7.9

- Show the dotted terminals for correct secondary series connection in fig 7.10.
- What is the VA of CT in fig 7.9 and 7.10 respectively?

2. Mark the following statements as true or false:

- Electromechanical relays tend to saturate at high currents. This reduces the relay burden on CT, and so that the CT

  performance at moderately high currents may be considered better than at relay's rated burden at 5A.

- Use of instantaneous over current relays has the potential to overcome this problem of saturation of CT's.

- Differential protection can operate on external faults due to the unequal saturation of CT's.

## Review Questions

1. What are the factors on which the peak value of DC offset current depends?
2. How does the DC offset current affect the performance of a CT?
3. Derive the equation for peak value of total flux developed in a CT core.
4. What is meant by core oversizing factor?
5. What are the precautions to be taken while selecting CTs?

## Recap

In this lecture we have learnt the following:

- DC offset current.
- CT saturation due to DC offset current.
- CT core oversizing factor.
- Cautions in CT selection.